5 January 2005 – This contact update page has been added to the Acrobat document you have downloaded. Please disregard any contact information printed within the document.

Our Mailing and Shipping Address:

White Instruments Div. C Van R, Inc.
1514 Ed Bluestein Blvd., Suite 201 (for U.S. Mail)
Austin, TX 78721 U.S.A.
Phone: 512-389-5358
Fax: 512-301-3932
Main Email Address: cvanr@whiteinstruments.com
World Wide Web Site: http://www.whiteinstruments.com/

Note: Repairs and packages should be shipped to Suite 202

White instruments

4856

Dual 1/3 Octave Equalizer

USER'S MANUAL

1514 Ed Bluestein Blvd. Austin, TX 78721
Phone: 512-389-3800 Fax: 512-389-1515

s110001000

1.5H795

UNPACKING

Carefully unpack your unit and inspect it for damage. If it is damaged, notify the carrier and White Instruments immediately. The carton should contain the following items:

1. The **4856** unit.
2. Four rack mounting screws.
3. One user service card.

After unpacking, fill in the user service card and mail it to White Instruments.

QUICK START

If you are familiar with sound system connections and would like to get your equalizer into service without reading the manual, follow the steps below now.

1. Using the 4 mounting screws provided, mount the unit into your rack.
2. Set the AC voltage selector switch on the device back panel to the appropriate 115 or 230VAC setting.
3. Connect the inputs for either balanced or unbalanced operation using either of the redundant XLR or 1/4" TRS sockets.
4. Connect the outputs for either balanced or unbalanced operation using either of the redundant XLR or 1/4" TRS sockets. Also, if required, connect the sub-woofer output for either balanced or unbalanced operation.
5. If using the sub-woofer feed, set the source select switch on the back panel for either channel A or A+B. For each channel sourcing the sub-woofer output, adjust its variable highpass filter control to the crossover mark indicated by "SUB."
6. Set the gain controls to their minimum setting.

SOUND SYSTEM CONNECTIONS

Balanced/Unbalanced Operation

Balanced audio signal connections are used when audio equipment must be operated in high EMI (electromagnetic interference) environments. They can prevent interference signals, such as those from power transformers or motors, from contaminating an audio signal.

Balancing is a function of 3 things: the driving circuit, the connecting cable and the receiving circuit. All 3 must be balanced in order for a system to be balanced. The **4856** has electronically balanced inputs and outputs. In order to maintain a balanced audio system, the devices before and after the **4856** in the signal chain must be balanced. In addition, the cables between the devices must also be properly configured. Figures 1 through 4 illustrate the correct method for making balanced and unbalanced connections. For balanced connections, it is common industry practice to use 2-conductor shielded cable and omit the signal common connection. Generally, both driving and receiving circuits are referenced to chassis ground with the cable shield tied to chassis ground at one end and left unconnected at the other end.

TABLE OF CONTENTS

UNPACKING **1**

QUICK START **1**

SOUND SYSTEM CONNECTIONS **1**

Balanced/Unbalanced Operation 1

FRONT PANEL CONTROLS **3**

EQ Filters 3

Variable Highpass Filter 3

Input Gain 3

EQ In/Out Switch 3

Headroom Indicator 3

Power Indicator 3

REAR PANEL CONNECTORS **3**

Analog Inputs and Outputs 3

AC Power 3

Sub-Woofer Output 3

FEATURES AND OPERATION **3**

EQ Filters 5

Variable Highpass Filter 5

Input Gain 5

EQ Bypass 5

Headroom Indicator 5

Output Relay with Power-Up Delay 6

Sub-Woofer Output 6

SYSTEM SET-UP **6**

SPECIFICATIONS **7**

WARRANTY POLICY **7**

Warranty Repairs 7

Out-of-Warranty Repairs 7

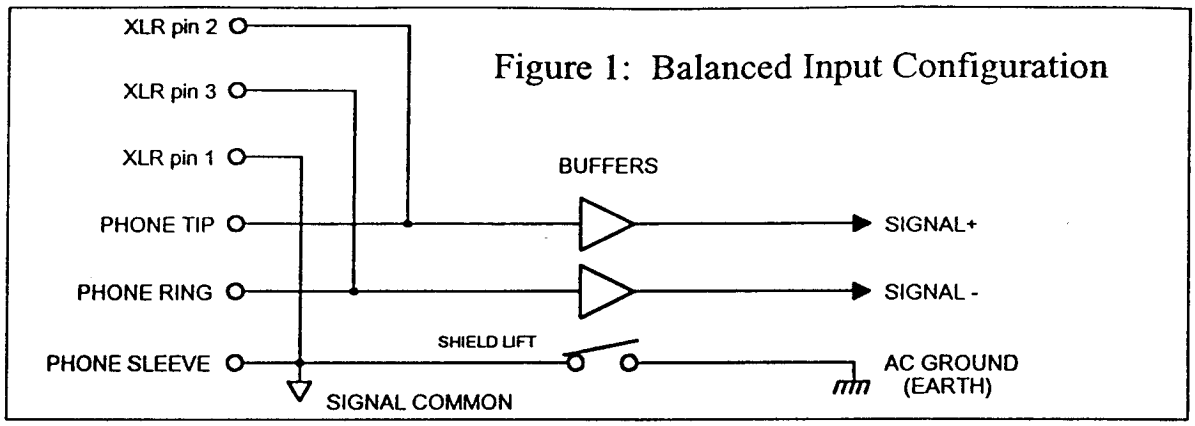

Figure 1: Balanced Input Configuration

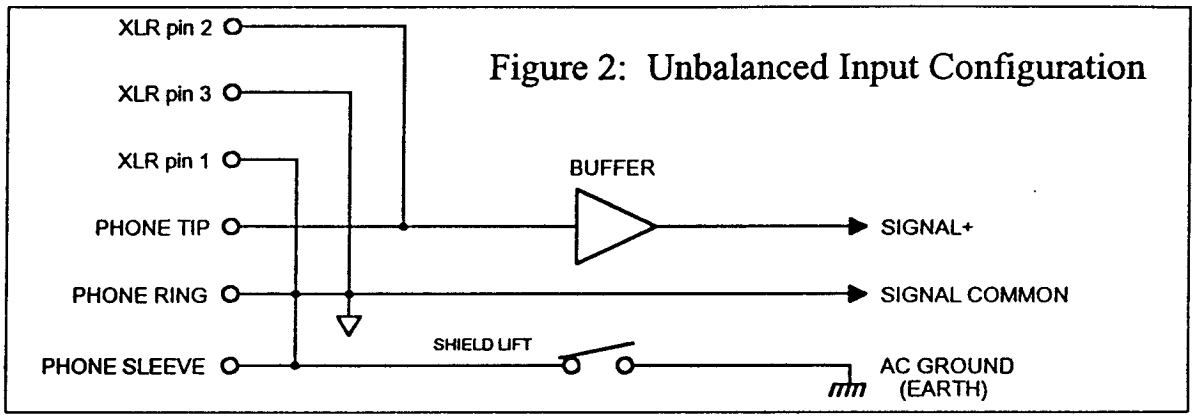

Figure 2: Unbalanced Input Configuration

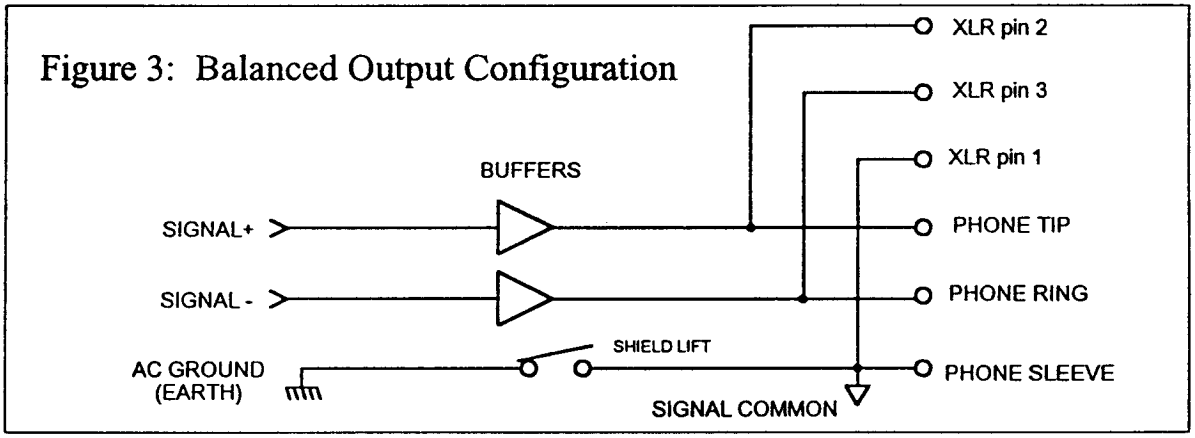

Figure 3: Balanced Output Configuration

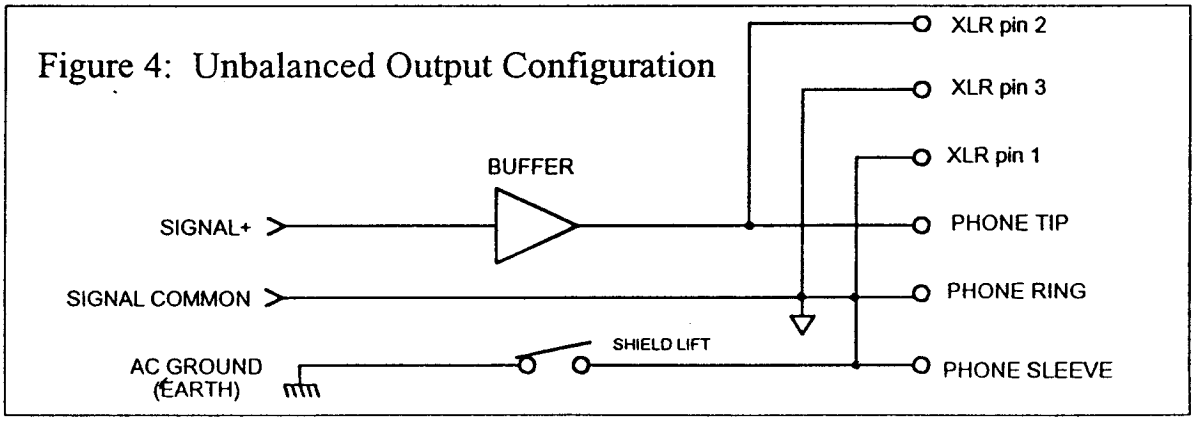

Figure 4: Unbalanced Output Configuration

Note: The **4856** is factory set with circuit common internally tied to chassis ground. If it is desired to isolate earth ground from chassis, an internal jumper must be removed.

FRONT PANEL CONTROLS

The front panel of the **4856** is shown in Figure 5 with each feature described below.

EQ Filters

Each channel on the **4856** has 28 1/3 octave filters, centered on I.S.O. frequencies from 31.5 Hz to 16 kHz. Each filter has a +/-15 dB level range and is actuated by a 45 mm linear slider control.

Variable Highpass Filter

Each channel on the **4856** has a variable highpass filter that ranges from 15 Hz to 175 Hz. It is actuated by a horizontally oriented 45 mm linear slider control.

Input Gain

Each channel on the **4856** has a variable input gain that ranges from 0 to 20 dB. It is actuated by a horizontally oriented 45 mm linear slider control.

EQ In/Out Switch

Each channel on the **4856** has an EQ in/out function that bypasses only the EQ filters when in the "out" position. It is actuated by a horizontally oriented toggle switch.

Headroom Indicator

Each channel on the **4856** has a 6 LED multicolored bargraph display which indicates available signal headroom before clipping.

Power Indicator

The **4856** has a green LED which indicates that power is on.

REAR PANEL CONNECTORS

The **4856** back panel is shown in Figure 6 with each feature described below.

Analog Inputs and Outputs

The **4856** has redundant 3-pin XLR and 1/4" TRS phone jacks on all main inputs and outputs.

AC Power

The **4856** has an internal power supply that can be operated at either 115 or 230 VAC @ 50-60 Hz, selectable from the back panel. The unit also has a back panel accessable fuse (750mA slow-blow).

Sub-Woofer Output

The **4856** has a separate sub-woofer output XLR connector for direct output to a sub-woofer amplifier. Its source signal can be selected from channel A A+B using the source select switch.

FEATURES AND OPERATION

The **4856** incorporates the following useful features into a 3 rack space device.

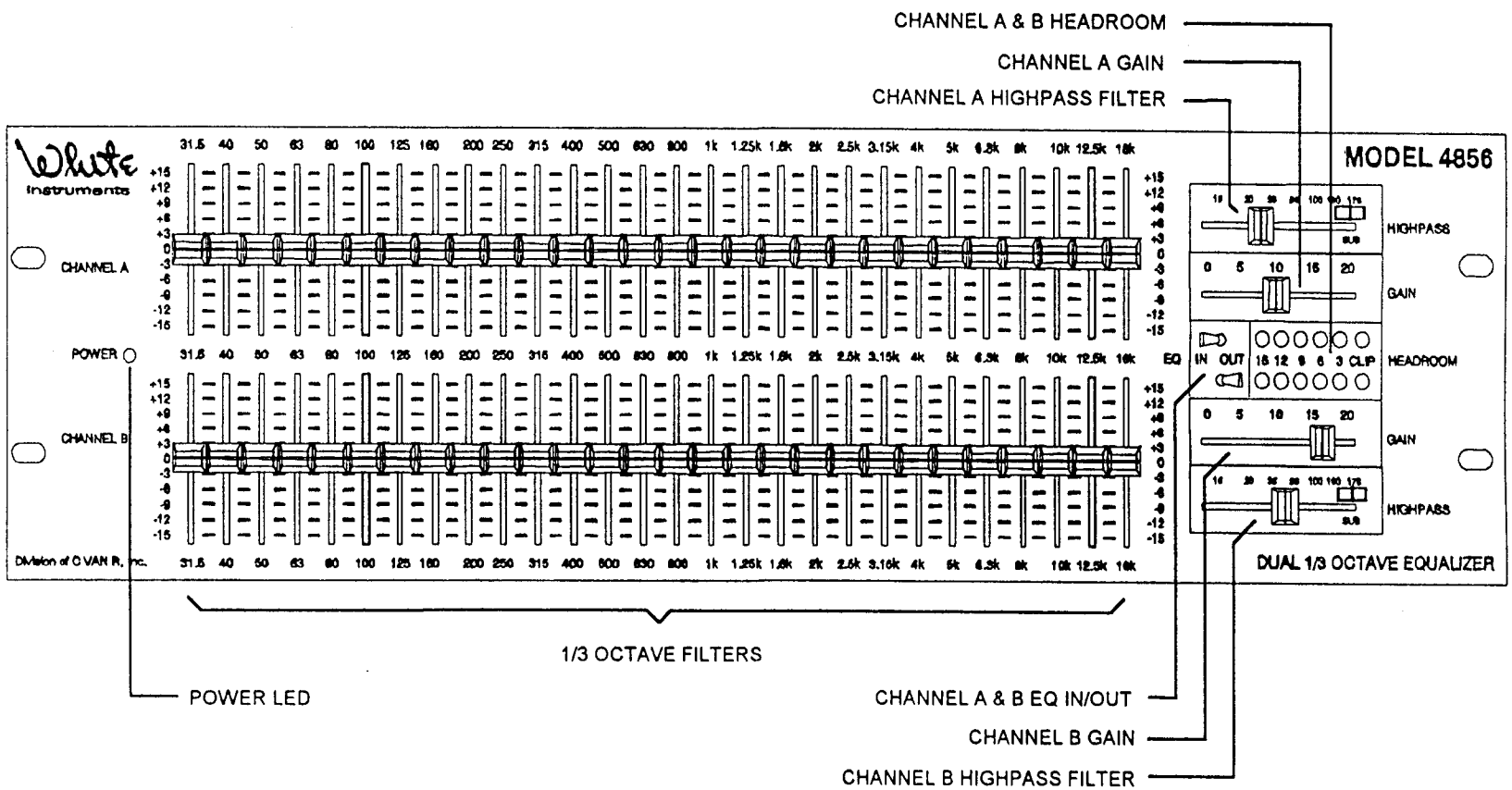

Figure 5. 4856 Front Panel

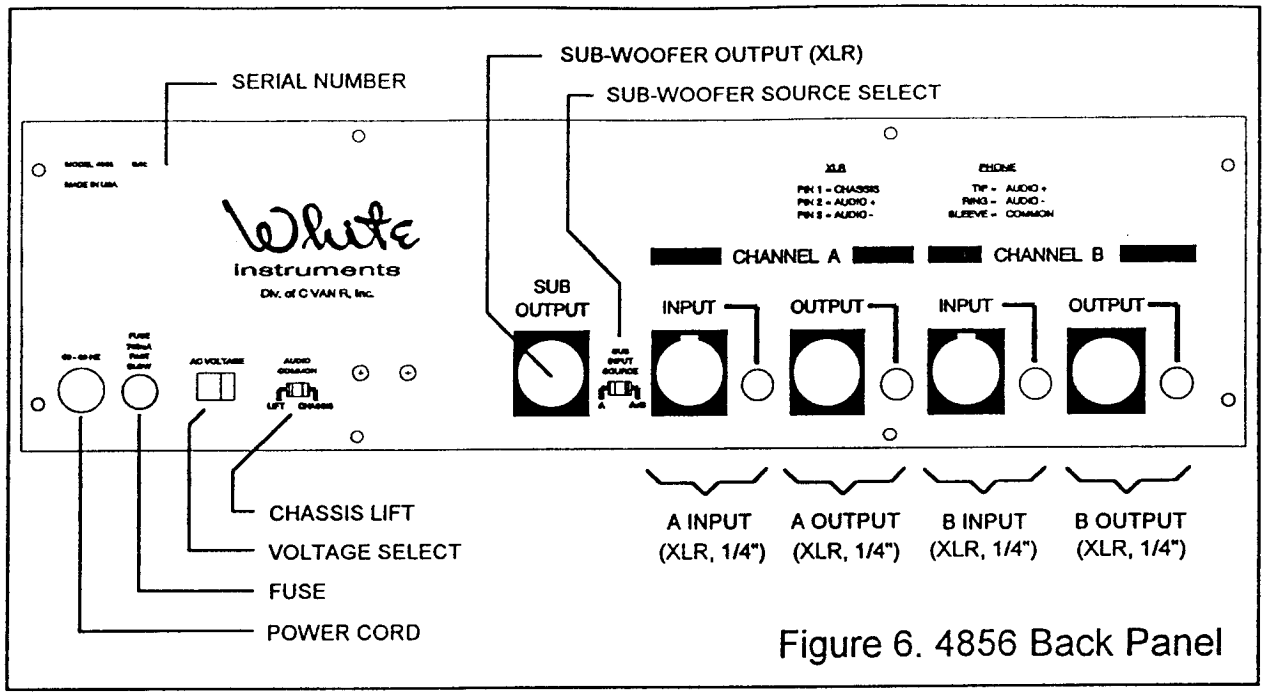

Figure 6. 4856 Back Panel

EQ Filters

Each channel of the **4856** has EQ filters with the following features:

- 28 filters on 1/3 octave I.S.O. centers.
- Level range +/- 15 dB .
- 2-pole MFB filter design, +/-5% frequency tolerance.

Variable Highpass Filter

Each channel of the **4856** has a variable highpass filter with the following features:

- Frequency continuously variable, 15 Hz - 175 Hz.
- Butterworth, 12 dB/octave design.

Input Gain

Each channel of the **4856** has a variable input gain with the following features:

- Gain continuously variable, 0 - 20 dB.

EQ Bypass

Each channel of the **4856** has a EQ In/Out switch with the following features:

- Switch only bypasses EQ filters; gain and highpass are not affected.

Headroom Indicator

Each channel of the **4856** has a headroom indicator with the following features:

- 6 multicolor (green, yellow, red) LED bargraph display.
- 15 dB range, 3 dB resolution.

Output Relay with Power-Up Delay

The **4856** has reed type relays on the main outputs with the following feature:

- Delayed closure after power-up (prevents "popping" in speakers at turn-on).

Sub-Woofer Output

The **4856** has a separate sub-woofer output with the following features:

- Fixed lowpass cutoff frequency = 100 Hz.
- Butterworth, 12 dB/octave slope.
- Source selectable from either channel A or A+B. Note: A+B setting implemented as (-(A+B))/2 with respect to main outputs.
- Sub-woofer crossover completed by setting variable highpass filter control(s) to "SUB" mark. Note: Channel B set only if source select switch set to A+B.
- Electronically balanced, XLR socket.

SYSTEM SET-UP

In order to obtain the maximum performance from your **4856** unit, follow these suggestions.

1. Connect the **4856** to the rest of the sound system as explained in the 'Quick Start' section at the beginning of this manual.

1. If you are using the sub-woofer, set the appropriate source channel highpass filter settings to the "SUB"mark to complete the sub-woofer crossover.

3. Set the gain level of the **4856** to optimize the dynamic range.

   a. Turn off all power amplifiers driven by the **4856**.

   b. Send program material at the maximum anticipated level into the **4856**.

   c. Set the **4856** gain control such that the headroom indicator shows occasional signal peaks in the red region.

   d. While still passing program material through the **4856**, adjust all power amplifiers to their minimum gain setting and turn them on. Adjust the amplifier gains until the desired output signal level is reached.

SPECIFICATIONS

Number of Channels:
Two.

Frequency Range:
20 Hz (-1.0 dB) - 20 kHz (-0.5 dB).

Maximum Operating Level:
+19 dBu into 600 Ω.

Dynamic Range:
109 dB.

Distortion:
< 0.02% into 600 Ω, 20Hz - 20kHz.

EQ Filters:
1/3 octave MFB design on ISO centers, +/-15 dB range, +/- 5% freq. tolerance, 45 mm slider travel .

Low Pass Filter:
Butterworth, 12 dB/octave, fixed @ 31kHz.

High Pass Filter:
Butterworth, 12 dB/octave, continuously variable, 15 Hz - 175 Hz.

Sub-Woofer Output:
Butterworth, 12 dB/octave, fixed @ 100 Hz; Source select, A or A+B.

Input Gain:
0 - 20 dB, continuously variable.

Headroom indicator:
Multicolor 6 LED bargraph, 3 dB resolution.

Input Impedance:
30 kΩ balanced, 10 kΩ unbalanced.

Input Circuit:
Active servo-balanced. Can operate unbalanced with no gain change.

Output Impedance:
100 Ω balanced, 50 Ω unbalanced.

Output Circuit:
Active servo-balanced. Can operate unbalanced with no gain change.

Connector Types:
Input/output - redundant XLR and 1/4" TRS; Sub-woofer - XLR.

Power Requirements:
90-130/180-260 VAC, 50/60 Hz, fuse: 750 mA, 1.25", slow-blow.

Mechanical:
5.2"(13.2cm) X 19"(48.3cm) X 12"(30.5cm), 9.5lbs (4.3kg), rack mount.

WARRANTY POLICY

Your White Instruments 4856 is warranted against defects in manufacturing, workmanship and original components for a period of ONE YEAR from the date of purchase. During this period, White Instruments will repair or replace the unit, at our option, so long as it has not been subjected to abuse. Abuse may be physical and/or electrical in nature. White Instruments will be the sole judge of this criteria.

White Instruments is the only warranty repair facility in the United States. Outside the United States, White Instruments distributors are authorized to make warranty repairs.

Warranty Repairs

Your unit should be securely packed and shipped, prepaid, to White Instruments or one of its authorized offshore distributors. A return authorization is required.

Our U.S. shipping address may be found on the front of this manual. Contact the factory for the name and address of the offshore distributor nearest you. A copy of your sales receipt should be included to establish the warranty date.

A letter detailing the unit's symptoms, with your name, shipping address and telephone number, must be included. Every effort will be made to complete repairs within 5 working days. Your unit will be returned to you via surface freight, prepaid. If you instruct us to return your unit via air freight, it will be shipped with freight charges collect.

Out-of-Warranty Repairs

Should the required repairs not be covered under warranty, you will be charged for parts, labor and freight. Should you require an estimate prior to repairing the unit, you should notify White Instruments of this when returning the unit. Every effort will be made to complete the repair within 5 working days. The unit will be returned C.O.D. unless otherwise instructed.