5 January 2005 – This contact update page has been added to the Acrobat document you have downloaded. Please disregard any contact information printed within the document.

Our Mailing and Shipping Address:

White Instruments Div. C Van R, Inc.
1514 Ed Bluestein Blvd., Suite 201 (for U.S. Mail)
Austin, TX 78721 U.S.A.
Phone: 512-389-5358
Fax: 512-301-3932
Main Email Address: cvanr@whiteinstruments.com
World Wide Web Site: http://www.whiteinstruments.com/

Note: Repairs and packages should be shipped to Suite 202

4300 Series

One-Sixth Octave - LC Active Equalizers

This document contains a reconstructed rendering of the original, printed data sheet and Users' Manual.

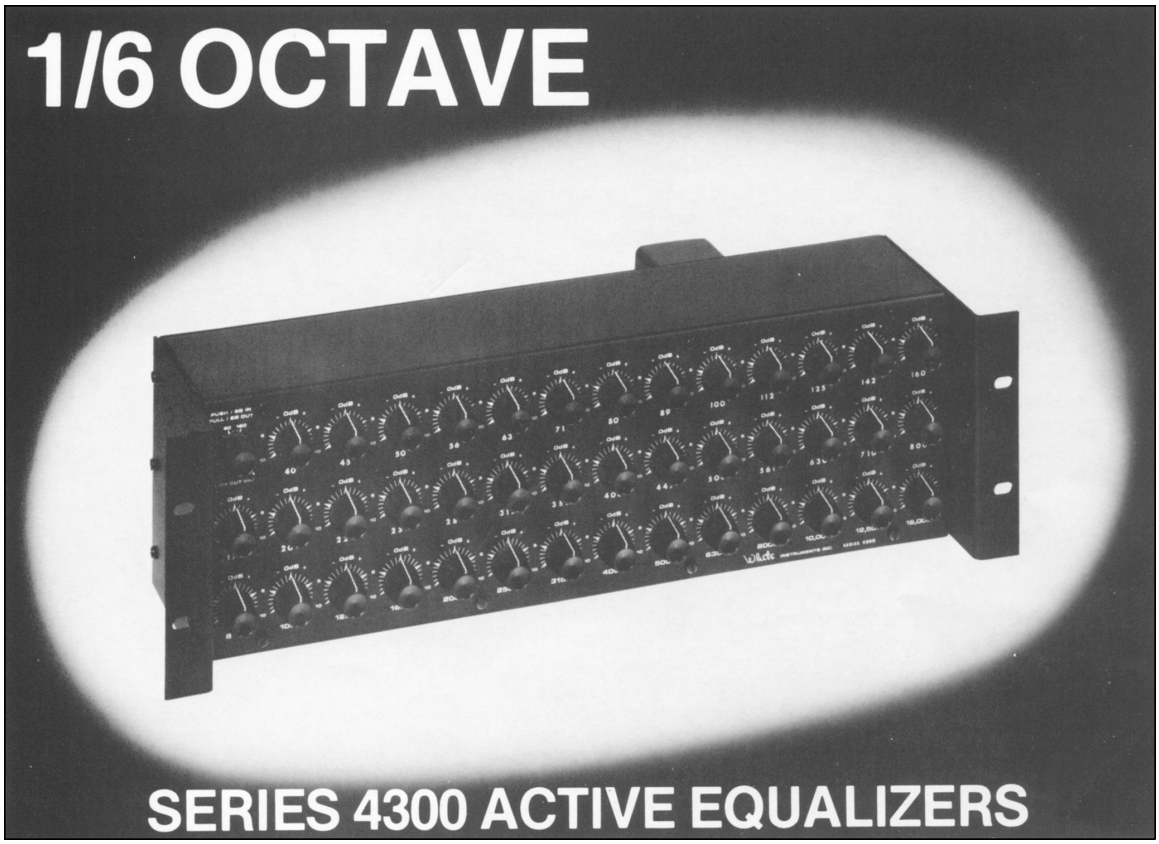

Series 4300 ACTIVE EQUALIZERS

ONE-SIXTH OCTAVE resolution in the low frequency range of a monitor equalizer offers the opportunity to achieve a higher degree of "smoothing" or "tightening-up" of the bass and low mid-range response of a room than is available with one-third octave equipment.

The White Instruments' SERIES 4300 Active Equalizers offer 28 one-sixth octave bands from 40 Hz through 894 Hz plus 13 one-third octave bands from 1000 Hz through 16 kHz. Each band has a control range of 10 dB boost or cut using Mil-Spec rotary potentiometers. An accessory socket located on the rear panel accepts optional low-level plug-in crossover networks which facilitate either BI-AMP or TRI-AMP outputs to the power amplifiers. An EQ in/out switch is located on the front panel to bypass the EQ circuits. Its function, however, will not bypass the crossover networks. Concentric with the EQ in/out switch is a high-pass filter with a variable range of 20 Hz through 160 Hz at 12 dB/octave roll-off.

The SERIES 4300 Active Equalizers have been designed carefully using the latest integrated circuit operational amplifiers. All negative feedback circuitry assures high linearity and stability. An optimum combination of LC and active circuits provide low noise and distortion operation.

FEATURES

28 ONE-SIXTH octave bands from 40 Hz through 894 Hz on and between I.S.O. one-third octave centers

13 one-third octave bands from 1000 Hz through 16 kHz on I.S.O. centers

10 d B boost or cut on continuous, calibrated, Mil-Spec controls

Equal Q in both boost and cut conditions

Filter Q optimized for best summation with adjacent bands

Precision inductors in magnetically shielded enclosures for maximum hum rejection

Accessory socket to permit insertion of 12 dB/octave or 18 dB/octave low-level crossover networks for bi-amping or tri-amping

Mid and high frequency output trimmers accessible from front panel

All negative feed back circuitry.

Field replaceable integrated circuits

Noise guaranteed -90dBv or better

Input attenuation control variable to 20dB of attenuation accessible from front panel

Transformer isolated input

Three buffered outputs for tri-amp operation (Model 4301). Transformer isolated outputs (Model 4303)

Shielded power transformer

Variable high-pass filter 20 Hz through 160 Hz, 12 d B /octave

Security cover

SPECIFICATIONS:

ELECTRICAL

FREQUENCY RANGE	20 Hz (-3 dB) through 20 kHz (-2 d B).
CONTROL CENTERS	28 one-sixth octave bands from 40 Hz through 894 Hz on I.S.O. one-third octave centers and between. 13 one-third octave bands from 1000 Hz through 16 kHz on I.S.O. one-third octave centers.
FREQUENCY CENTER TOLERANCE	One-sixth octave section: ±1%. One-third octave section: ±2%.
CONTROL RANGE	-10 d B through +10 d B continuously variable and calibrated.
HIGH-PASS FILTER	12 dB/octave continuously variable from 20 Hz through 160 Hz.
RECOMMENDED OPERATING LEVEL	0 dBv (0.775 Vrms).
INPUT CIRCUIT	Transformer isolated 20,0000hms.
INPUT ATTENTUATOR	Unity to 20 d B attenuation.
NUMBER OF OUTPUTS	3.
OUTPUT CIRCUIT	Model 4301: 3 buffered single-ended outputs – 0 ohms. Model 4303: 3 transformer isolated – 300 Ohms.
OUTPUT ATTENUATORS	Mid and High: Unity to 20 d B attenuation.
MAXIMUM OUTPUT LEVELS	Model 4301: +18 dBv into 600 Ohm load. Model 4303: +15 dBv into 600 Ohm load +18 dBv into 5000 Ohm load.
NOISE	Better than -90 dBv (20 kHz bandwidth).
DISTORTION	Less than 0.2% to + 18 dBv.
POWER	115/230 Vac-50/60 Hz. 5 Watt nominal consumption. 0.5Amp fuse

MECHANICAL

FILTER CONTROLS	All front panel mounted. Fully sealed Mil-Spec potentiometers.
EQ IN/OUT SWITCH	Front panel mounted push/pull switch concentric with high-pass filter control.
HIGH-PASS FILTER	Front panel mounted. Fully sealed Mil-Spec potentiometer.
INPUT ATTENUATOR	Screwdriver adjusted, fully sealed Mil-Spec potentiometer accessible from front panel.
MID AND HIGH OUTPUT ATTENUATORS	Screwdriver adjusted, fully sealed Mil-Spec potentiometers accessible from front panel.
CONNECTORS	Barrier strips.
DIMENSIONS	5-1/4" by 19" by 9-1/2"
WEIGHT	Approximately 15.5 pounds.
FINISH	Brushed black anodized aluminum with white nomenclature.
SECURITY COVER	Furnished with matching security covers attachable with thumbscrews.

ACCESSORIES

SECURITY Cover	Clear Plastic Security Covers available upon request.
CROSSOVER Networks	**4015-f_o** 12 dB/octave crossover network, plug-in, bi-amp.
	4016-f_o 18dB/octave crossover network, plug-in, bi-amp.
	4315-f_1 f_2 12 dB/octave crossover network, plug-in, tri-amp.
	4316-f_1-f_2 18 dB/octave crossover network, plug-in, tri-amp.
	Any crossover frequency(ies) over 100 Hz may be ordered. Please specify.

ORDERING INFORMATION

Model 4301 Transformer isolated input, single ended outputs.

Model 4303 Transformer isolated input, transformer isolated outputs for fully balanced operation.

4300 SERIES - USERS' MANUAL

UNPACKING

Your Series 4300 Equalizer has been carefully packaged to avoid damage in shipment. If the unit has been damaged in shipment, SAVE ALL PACKING MATERIALS and file a claim with the shipper.

The Series 4300 package should contain:

this instruction manual,

a security cover and

a plastic envelope containing four 10-32 x 1/2" rack mount screws

along with the unit.

OPERATION

Circuit Description

Input

The input impedance of either the Model 4301 or Model 4303 is **20** kilohms. Both Models have a floating input coupled by a 1:1 transformer to the input buffer stage. Either side of the input winding may be grounded or it may be left completely floating if desired. NOTE: It is very important that there be NO DC voltage component present on the input line as this will cause the transformer core to saturate and cause distortion.

A screwdriver adjustable input attenuator providing up to 20dB 'of padding is located on the front panel. This control is marked "Level" and is on the left of the three controls.

Filter Sections

The Series 4300 Active Equalizers incorporate RLC and 1/6 octave elements for response control in an audio system. They contain 1/3 octave filter sections, continuously adjustable from +10 dB of emphasis to -10 dB of cut in each band.

Integrated circuit operational amplifiers are used in a NEGATIVE feedback circuit with very low distortion. The basic circuit follows:

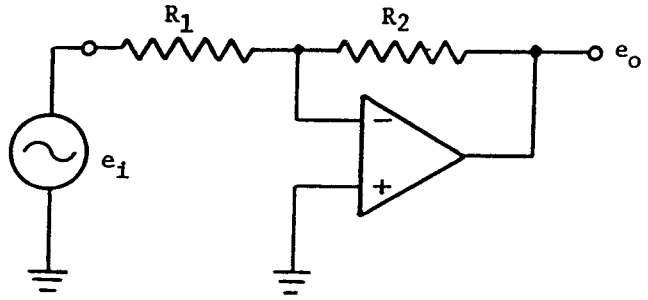

$$\frac{e_o}{e_i} = \frac{R_2}{R_1}$$

The filter sections are added as shown in the following circuit, with only one section as an example.

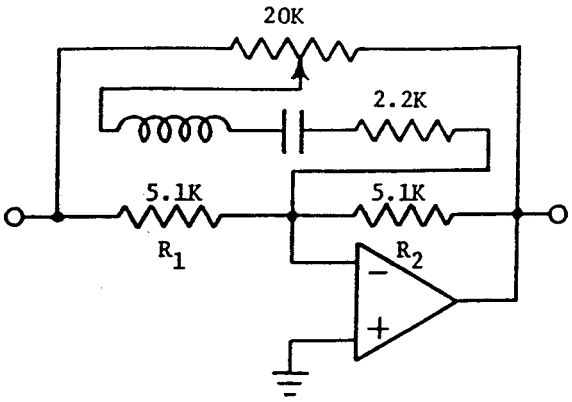

The amplifier summation resistors are equal, and without the filter controls, they give a gain of unity (0 dB). Then if a potentiometer is connected from input to output as shown be1ow, it has no effect on the gain. Next the RLC circuit is added.

With the pot set at electrical-center, the RLC circuit is at a balance position and has no effect on the response. If it is turned all the way to one end, it looks as follows:

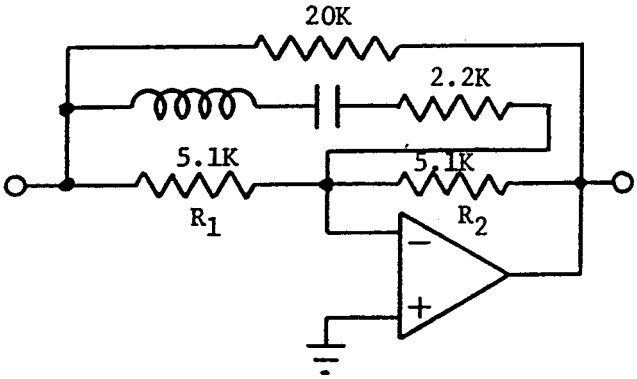

At the resonant frequency f_0 of the LC, the 2.2k resistance is in para11el with the 5.1k, and the gain ratio R_2/R_1 is about 3/1 or +10 dB. Far away from f_0, the gain returns to unity because L or C is high in impedance and the 2.2k resistance is effectively out of the circuit. Tuning through f_0 gives a band-pass peak in the response that may be adjusted from any value from 10 dB down to flat.

Conversely, if the pot is set at the other end, the gain ratio is inverted and the response is a 10 dB notch.

The 1/6 octave and 1/3 octave bandwidths are set by ratio of L/C, and are chosen to give a proper addition of adjacent channel response curves.

In effect, the individual filter sections combine to make up a single filter whose electrical response curve is free of unwanted ripple and excessive phase shift. In fact, the Series 4300 can provide extended shelving functions up to +10 dB with <u>no</u> ripple and <u>no</u> phase shift between adjacent center frequencies. The importance of this feature is pointed out in the figure below.

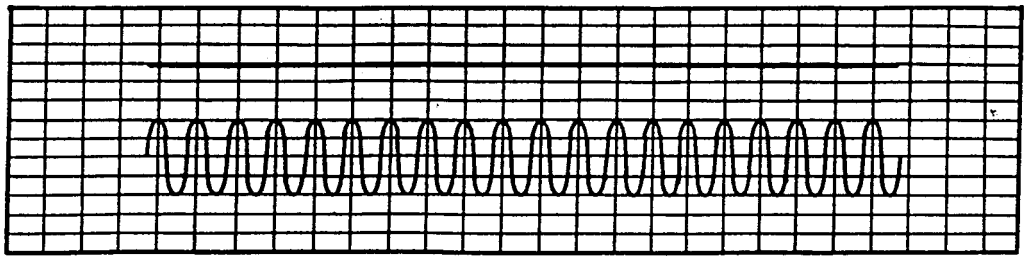

Both curves will measure "flat" on a 1/3 octave analyzer because both have uniform energy in all 1/3 octave bands. But the lower curve (produced by some equalizers) will introduce audible degradation of program material in critical monitoring applications and can trigger acoustic feedback in sound reinforcement installations.

The **RLC** filters are divided into 4 groups. All filter sections in one group are at least 2/3 octave apart. All in one group are "stacked" on one operational amplifier. The separation makes reactive tuning effects small between the stacked sections.

Output Circuits

Both Models 4301 and 4303 have three identical output sections. These output sections are buffered and independent of one another. Access to the output of the filter section and the inputs to the output buffers is gained via the octal socket on the rear of the unit. In this socket various filter functions can be installed which will effect any or all three of the outputs. The impedance of each output is virtually zero ohms and is capable of driving signal levels as great as +18 dBm into load impedances of 600 ohms or greater. Model 4303 has floating transformers in each output for complete isolation.

EQ In/Out Switch

Located on the front panel concentric with the variable high-pass filter, this push-pull switch will bypass the filter circuits of the Series 4300 Equalizers. The bi-amp or tri-amp functions, however, are not affected by this switch.

Installation

Mechanical

The Series 4300 fits a standard 5 1/4" by 19" rack space. A package of four **10-32** screws is furnished for the purpose of mounting the unit in a rack. About eight inches of space is required behind the rack to accommodate the unit.

It is recommended that the Series 4300 be mounted at least 18" away from any large power supply as those found in a power amplifier. This will reduce greatly the possibility of picking up hum by the equalizers' tuned inductors.

Power

The unit operates from a nominal 110/220 Vac (50-60Hz) and is fused for 1/10 amp slow-blow. No power switch is provided and the unit is ready to operate as soon as power is applied. A solid state pilot light is provided in the center of the front panel to indicate when the unit is on.

Connections

Connection is made to the Series 4300 via a barrier type terminal block on the rear of the unit.

Grounding

In neither unit is the circuit common connected to the chassis. It is up to the user to provide a circuit ground compatible with the rest of the system. Care should be taken to prevent ground loops and excessive hum pickup.

It is recommended that the chassis of the unit be electrically connected to the ground bus common to the other eguipment in the system. The circuit common should be connected to either the system ground bus or to the system common bus.

Source and Load Impedances

The Series 4300 can operate from a source impedance of 1000 ohms or less. Both units have virtually zero output impedance and are capable of driving impedances as low as 600 ohms. Higher load impedances require no accommodation.

Levels

Both the Model 4301 and 4303 have a maximum output level of +18 dBm or 6 Vrms. It is recommended that the units be operated at an average level of 0 dBm (0.78 Vrms) to allow adequate headroom for variation in program material and boost equalization.

Screwdriver adjustable output trimmers providing up to 20 dB of padding are located on the front panel. Their function is to compensate for the superior efficiency of mid and high frequency driver. The control marked "Mid" attenuates the output of output #2, The control marked "High" attenuates the output of output #3.

Accessory Socket

On the rear of both units is located an accessory socket. Various filter functions may be inserted prior to the output stages. If no accessory filters are plugged in, it is necessary to have jumpers inserted to complete the circuit. Pins 2, 3, 6 and 7 are all connected to each other by jumpers. These jumpers are normally installed at the factory.

Security Cover

The Series 4300 Active Equalizers are provided with a security cover. A center hole is provided for viewing the pilot lamp on the front panel.

EQUALIZATION

Program Shaping

The low distortion and low noise of the Series 4300 equalizers make them well-suited for recording and broadcast program equalization. Shelving, peaking, and band-limiting functions all can be performed simultaneously. Also, the relatively narrow bandwidth of individual filter sections makes it possible to "scrub" unwanted hum and noise from tape recordings.

Playback and Monitor Equalization

Series 4300 equalizers can be used in conjunction with established **1/3** octave and 1/6 octave measuring techniques and instrumentation, such as the White Instruments Series 140 Sound Analyzers, to improve the performance of almost any program reproducing chain. An explanation of detailed equalization procedures is beyond the scope of this manual; however, the following brief hints may be helpful:

1. Know the characteristics of your measuring microphone. A laboratory-quality, non-directional unit such as the Bruel **&** Kjaer 4134 is recommended. But all microphones become somewhat directional at high frequencies and it is important to avoid erroneous measurements resulting from microphone characteristics.

2. Average two or three sets of readings for each listening location. Using a single fixed microphone location can introduce errors of several decibels in comparison with the average response in an imaginary two-foot diameter sphere occupying the same position as a listener's head.

3. Don't equalize for flat high frequency response. Depending on listener preference and the particular loudspeaker system used, acoustic response of recording studio monitors is usually rolled off above 5 kHz or so. Home high fidelity systems usually require greater roll off, typically starting around 2.5 kHz.

4. Be careful not to exceed the limitations of loudspeakers and power amplifiers when equalizing low frequency performance. Small listening rooms inevitably introduce large peaks and dips at low frequencies; trying to electrically compensate for a 15 dB hole in measured response can overload both amplifier and speaker with little benefit in audible performance.

5. Don't try to "fill in" isolated 1/6 octave of 1/3 octave dips. A relatively narrow response hole cannot be heard on most types of program material. Trying to flatten it may result in introducing a peak in overall response too narrow to show up in analysis, but clearly audible when listening to the system.

NOTE: It is this effect – the result of incorrect equalization technique – that is responsible for the comment that boost filters "ring". The bandwidth of Series 4300 filter sections is much too broad to allow perceptible hangover. However, if a single control is set several decibels higher than either of the adjacent controls, the boosted frequency band is narrow enough to be analyzed by the ear as an emphasized single tone.

6. Always strive for the least amount of equalization that will make the system sound right. If you can achieve desired performance with several of the controls left at zero, so much the better.

7. Using 1/3 octave bands for acoustic analysis is a powerful technique which has been standardized internationally for numerous applications other than sound system equalization now that resolution over the troublesome low frequencies has been doubled with 1/6 octave analysis and equalization. Remember, however, that no instrumentation, no matter how expensive or sophisticated, corresponds exactly with the subjective assessment of the human ear. While it is impossible to properly equalize a monitor system solely by ear, it is just as impossible to do it solely by instrument.

Equalization of Sound Reinforcement Systems

Most of the comments in the preceding paragraphs also apply to sound reinforcement work. However, we now must be concerned not only with sound quality but with maximum gain before acoustic feedback. The use of electrical equalization to achieve these often contradictory requirements stems from the pioneering work of Dr. C. P. Boner and most of the techniques in use today are outgrowths of his findings.

Again we emphasize that this brief manual cannot serve as a textbook for sound system equalization. The following outline briefly describes a sequence of steps that is used successfully by some acousticians and sound contractors, but considerable experience is needed to be confident in using this or any other procedure.

1. Begin equalization only after the installation is completed and balances, and after seat-to-seat coverage is acceptable. If high frequency coverage is spotty, this deficiency will become more apparent after the system is equalized.

2. Choose three or more typical listening locations at which acoustical measurements will be made. The idea is to find representative seats, neither the best nor the worst, to establish the house curve.

3. Using standard measuring techniques, make accurate response measurements at the chosen locations and then average these to obtain the unequalized house curve.

NOTE: In some cases it is possible to save time by using the system microphone for acoustical measurements and thus automatically compensating for its characteristics in the equalization process. However, unless one is familiar with this technique, it probably is safer to rely on a calibrated microphone or precision sound level meter.

4. From the unequalized house curve you have drawn, calculate the electrical equalization which will be required to arrive at the desired house curve. Required equalization is the difference between the measured curve and the desired curve. For most typical churches and auditoriums, the desired curve will closely follow Dr. Boner's "Listener Preference Curve".

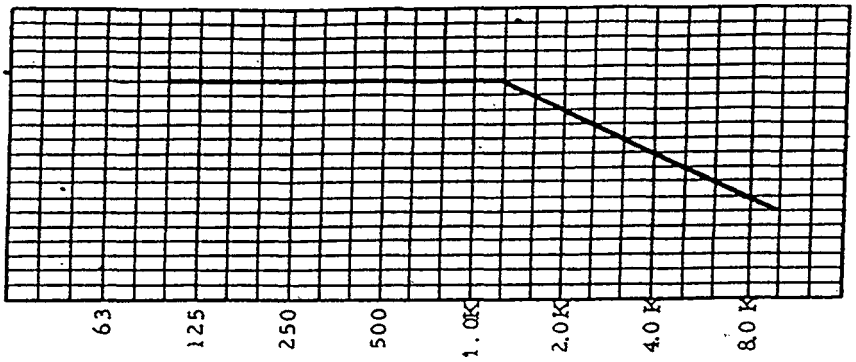

5. Check the system under normal operating conditions for intelligibility and natural voice quality. Make further equalization adjustments as required. However, if initial measurements have been made correctly, such adjustments should not change the original equalization curve by more than 3 dB.

6. Once the system sounds right, check for maximum gain before feedback. Identify the first two or three feedback frequencies and further attenuate the corresponding equalization controls 2-3 dB. There are several ways in which ring frequencies can be pin-pointed. If self-oscillation can be sustained, the correct 1/6 or 1/3 octave band can be identified on a real time analyzer display. Alternatively, one can beat a ring frequency against a signal from a sine wave oscillator connected to the system. Or, if a frequency counter is at hand, it may be connected to the system at some suitable point (such as the speaker terminals) and used to measure the frequency of oscillation directly.

7. After you are satisfied that the best trade-off between sound quality and system gain has been achieved, measure the house curve once more, measure the electrical response of the system, and log all equalizer control settings.

8. Additional Helpful Hints

a. Don't pull down the entire 1-2 kHz region in an effort to get more "gain". It is in this region that the ear is most sensitive, and you will only degrade sound quality without improving loudness or intelligibility.

b. The 2-5 kHz region is critical for intelligibility and subjective high frequency smoothness. A 2 dB change in this region will make a clearly audible change in the system performance.

c. Avoid substantial boost in the loudspeaker system crossover range. Increasing the power fed to high frequency units near crossover effectively reduces the power handling capability of the whole loudspeaker system.

d. Listen to the performance of the system under all typical operating conditions.

e. In some cases, a sound system can be <u>too</u> natural. If the audience or congregation is not aware of the sound system, they may think it is not working. Just a little bit of extra "presence" in the 2-5 kHz region is sometimes a good idea.

f. Trust your ears as well as your instruments.

BI-AMPING AND TRI-AMPING

Types of Low Level Crossover Networks Available

Both 12 dB octave and 18 dB octave passive LC networks are available. frequencies of **500 Hz** and **1200 Hz** are standard. Other frequencies are available on request. These units are magnetically shielded to minimize hum pickup.

Installation

To utilize the bi-amp or tri-amp feature or the 4300 Series, insert the appropriate network in the octal socket on the rear of the unit. OUT 1 then becomes the low frequency output, OUT **2** becomes the mid frequency output, and OUT 3 becomes the high freguency output. The EQ in/out switch does not affect the bi-amp or tri-amp circuitry.

Special Networks

Special networks providing special functions may be inserted into the accessory socket. The user should contact the factory to discuss special applications.

MAINTENANCE

Troubleshooting

The circuitry of the Series 4300 consists of state-of-the-art integrated circuits and high reliability military grade components. If the circuit fails to operate, check the following:

1. Power connected (pilot lamp illuminated on front panel).
2. Fuse: 1/2 amp, 3AG, slow-blow.
3. Proper connection and signal present from previous stages.
4. Jumpers, bi-amp or tri-amp network inserted in octal accessory socket.
5. "Level", "Mid" and "High" controls turned up.

Integrated Circuits

The integrated circuits in the Series 4300 are field replaceable. If you suspect that an integrated circuit is not functioning, replacement units may be obtained from the factory.

Return to the Factory

If trouble cannot be located, permission should be sought to return the unit to the factory (see Warranty).

WARRANTY

All our products are guaranteed against defects in materials and workmanship for one year from date of shipment. Our warranty is limited to repairing or replacing any product which fails during the warranty period from normal use. White Instruments will not be liable for any damage resulting from the use of this instrument.

Damage in Shipment

Our instruments are shipped with full insurance unless the buyer instructs otherwise under his self-insurance. Prompt inspection should be made upon delivery and any necessary claims made against the carrier. Please notify us at once and we will cooperate in obtaining repairs or a replacement.

Return Shipment

Any instrument returned for repair should be safely packed and shipped prepaid to us. An explanation of the type of trouble encountered should accompany the instrument, or be sent to us separately in writing, or transmitted by phone. Repairs and checks will be made promptly. Return will be made collect by the best way, or by the owner's choice of method.

White INSTRUMENTS, INC.
Austin, Texas

SERIES 4300
CIRCUIT DIAGRAM

DRAWN	JHB	6-8-78	
CHECK			
APP'D	CR	6-12-78	

A 053

TOLERANCES
frac. deci.

SCALE

Rev | Description | App'd

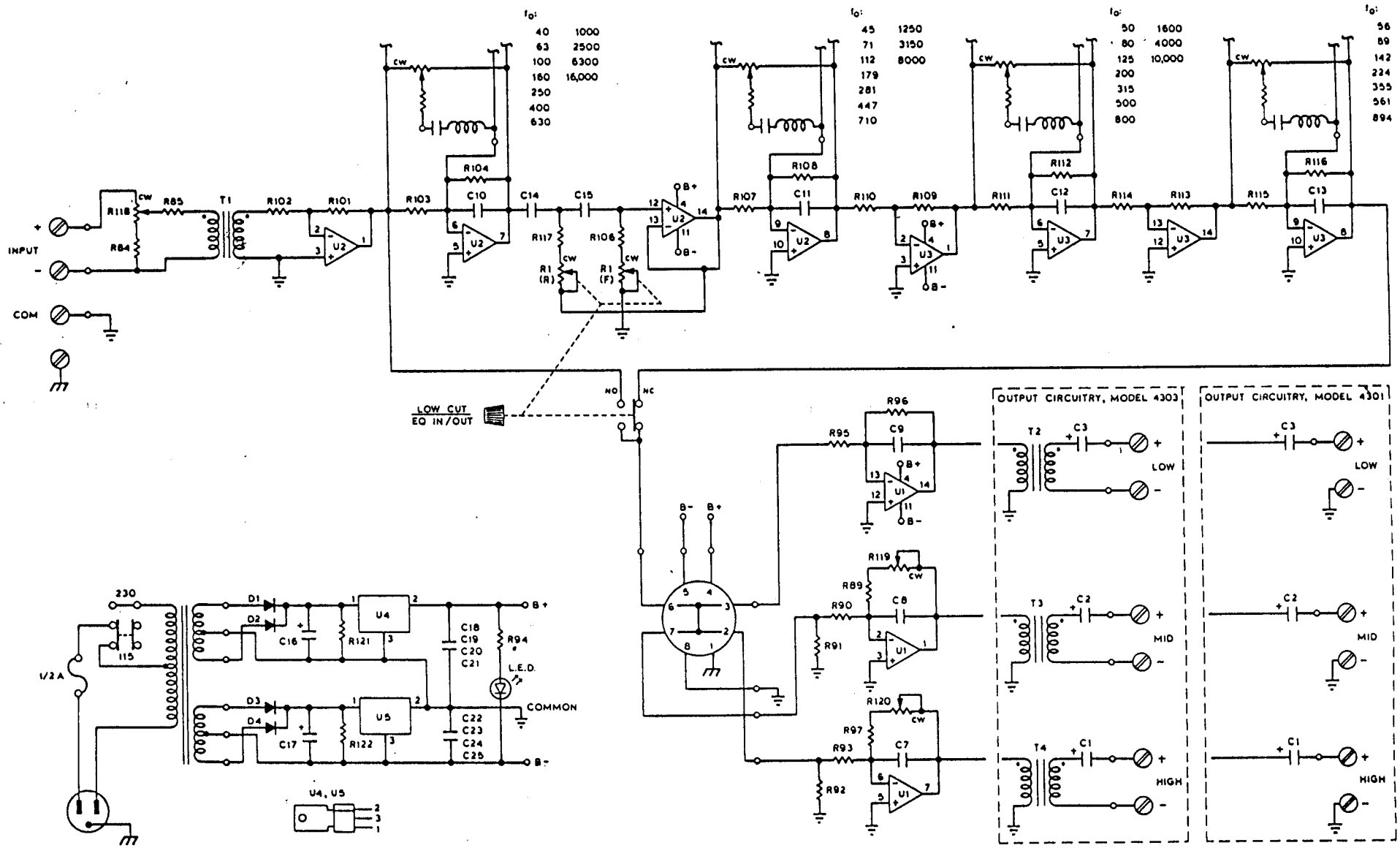

NOTE: C19-C21 AND C23-C25 ARE BYPASS CAPACITORS LOCATED NEAR OP AMPS.